GAIA Sublimation Template

Jerseys
Women

v0.91

BACK of SLEEVE

FRONT of SLEEVE

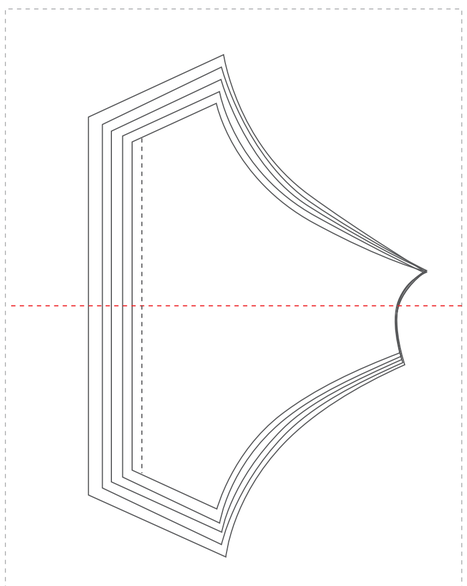

RIGHT SLEEVE

FRONT BODY

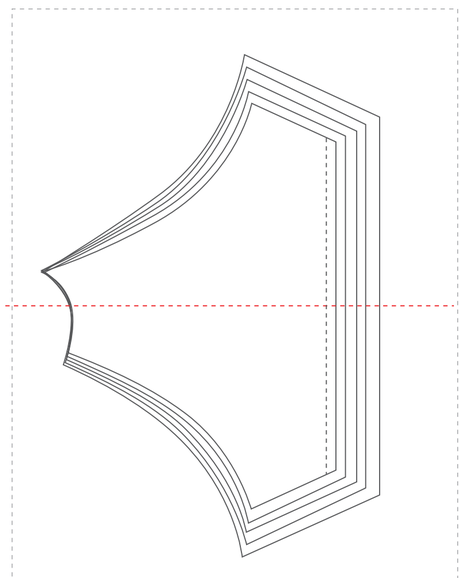

LEFT SLEEVE

BACK of SLEEVE

FRONT of SLEEVE

COLORS of Artwork:

- [ ]
- [ ]
- [ ]

BACK BODY

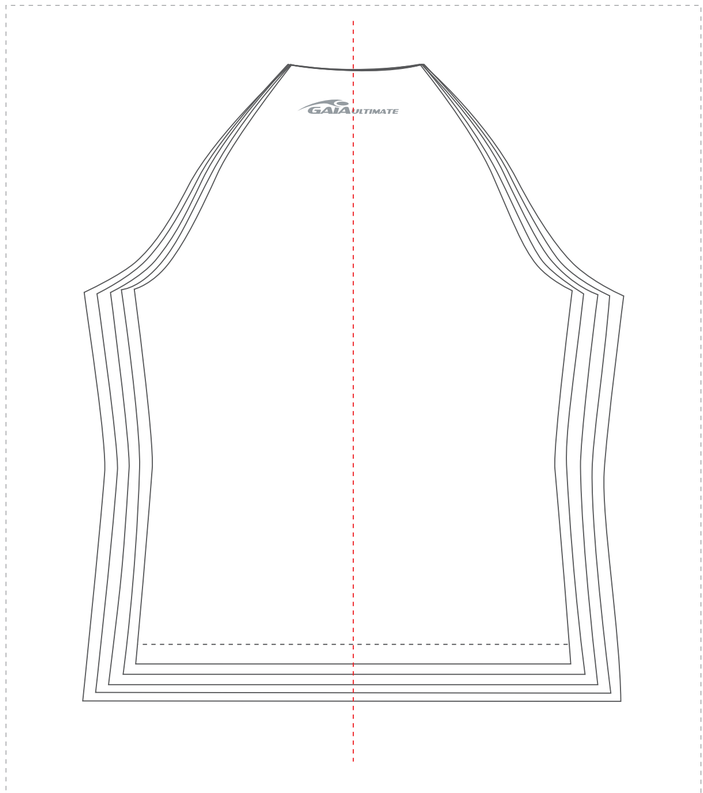

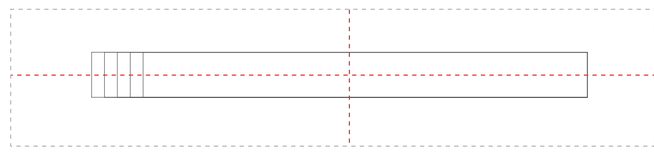

Inner Collar (not visible)

Outer Collar (visible)

COLLAR

COLORS of GAIA Logos:

- [ ] CMYK 5, 0, 0, 45
- [ ] CMYK

COLORS of Threads (1 color only):

- [ ] CMYK

The color of the threads is always the same for **all** stitches. For multiple color artwork this may result in some slight contrasting effect on affected seams.

NOTES:

The solid lines represent the shape of the ready made jersey and is the complete design area.

Your artfile must cover the complete area of the grey rectangle boxes, surrounding each of the different panels.